Small, Light, High Speed & Torque 5-Phase Stepper Motor Driver

■ Features

- Bipolar constant pentagon drive method
- Includes auto current down and self-diagnosis function
- Low speed rotation and high accuracy controlling with microstep-driving (MD5-HD14, MD5-HF14, MD5-HF14-AO, MD5-HF28)
  [Max. resolution - 250 division / In case of 5-phase stepper motor of which basic step angle is 0.72°, it enables to control up to 0.00288° per pulse and it requires 125,000 pulses per rotation.]
- Photocoupler input insulation method to minimize the effects from external noise

⚠ **Please read "Safety Considerations" in operation manual before using.**

(only for MD5-HF14 model)

■ Ordering Information

MD 5 – H F 14 – □

Output	No mark	Zero point excitation output※1
	AO	Alarm output
RUN current	14	1.4A/Phase
	28	2.8A/Phase
Power supply	D	20-35VDC
	F	100-220VAC 50/60Hz
Step type (resolution)	H	Micro step (250-division)
	N	Normal Step
Motor phase	5	5-Phase
Item	MD	Motor Driver

※1: Except MD5-ND14

※KR-55MC can be replaced with MD5-HD14.
※KR-5MC can be replaced with MD5-ND14.
※MD5-MF14 can be replaced with MD5-HF14.
※KR-505G can be replaced with MD5-HF28.

■ Specifications

Model		MD5-HD14	MD5-HF14	MD5-HF14-AO	MD5-HF28	MD5-ND14
Power supply		20-35VDC⎓※1	100-220VAC～ 50/60Hz			20-35VDC⎓※1
Allowable voltage range		90 to 110% of the rated voltage				
Max. current consumption※2		3A			5A	3A
RUN current※3		0.4-1.4A/Phase			1.0-2.8A/Phase	0.5-1.5A/Phase
STOP current		27 to 90% of RUN current (set by STOP current switch)				25 to 75% of RUN current (set by STOP current volume)
Drive method		Bipolar constant current pentagon drive				
Basic step angle		0.72°/Step				
Resolution		1, 2, 4, 5, 8, 10, 16, 20, 25, 40, 50, 80, 100, 125, 200, 250-division (0.72° to 0.00288°/Step)				1, 2-division (0.72°, 0.36°/Step)
Input pulse characteristic	Pulse width	Min. 1μs (CW, CCW), Min. 1ms (HOLD OFF)				Min. 10μs (CW, CCW), Min. 1ms (HOLD OFF)
	Duty rate	50% (CW, CCW)				
	Rising/Falling time	Below 130ns (CW, CCW)				
	Pulse input voltage	[H]: 4-8VDC⎓, [L]: 0-0.5VDC				
	Pulse input current	7.5-14mA (CW, CCW), 10-16mA (HOLD OFF, DIVISION SELECTION, ZERO OUT)※4				
	Max. input pulse frequency※5	Max. 500kHz (CW, CCW)				Max. 50kHz (CW, CCW)
Input resistance		270Ω (CW, CCW), 390Ω (HOLD OFF, DIVISION SELECTION), 10Ω (ZERO OUT)		270Ω (CW, CCW), 390Ω (HOLD OFF), 10Ω (ALARM)	270Ω (CW, CCW), 390Ω (HOLD OFF, DIVISION SELECTION), 10Ω (ZERO OUT)	390Ω (CW, CCW, HOLD OFF)
Insulation resistance		Over 100MΩ (at 500VDC megger, between all terminals and case)				
Dielectric strength		1000VAC 50/60Hz for 1min (between all terminals and case)				
Noise immunity		±500V the square wave noise (pulse width: 1μs) by the noise simulator	±2kV the square wave noise (pulse width: 1μs) by the noise simulator			±500V the square wave noise (pulse width: 1μs) by the noise simulator
Vibration	Mechanical	1.5mm amplitude at frequency 5 to 60Hz (for 1 min) in each X, Y, Z direction for 2 hours				
	Malfunction	1.5mm amplitude at frequency 5 to 60Hz (for 1 min) in each X, Y, Z direction for 10 min				
Environ-ment	Ambient temp.	0 to 40°C, storage: -10 to 60°C	0 to 50°C, storage: -10 to 60°C			0 to 40°C, storage: -10 to 60°C
	Ambient humi.	35 to 85%RH, storage: 35 to 85%RH				
Approval		CE	CE c UL us	CE	CE	CE
Weight※6		Approx. 327.5g (approx. 220g)	Approx. 840g (approx. 680g)	Approx. 820g (approx. 660g)	Approx. 1.35kg (approx. 1.2kg)	Approx. 183g (approx. 130g)

※1: When using over 30VDC power supply, torque characteristics are improved but the driver temperature raise. The unit should be installed at the well ventilation environment.
※2: Based on ambient temperature 25°C, ambient humidity 55%RH.
※3: RUN current varies depending on the input RUN frequency and max. RUN current at the moment varies also varies depending on the load.
※4: In case of MD5-HF14-AO, MD5-ND14, there are no DIVISION SELECTION, ZERO OUT function.
※5: Max. input pulse frequency is max. frequency to be input and does not same as max. pull-out frequency or max. slewing frequency.
※6: The weight includes packaging. The weight in parenthesis is for unit only.
※Environment resistance is rated at no freezing or condensation.

5-Phase Micro Stepper Motor Driver [MD5-HD14]

▣ Unit Description

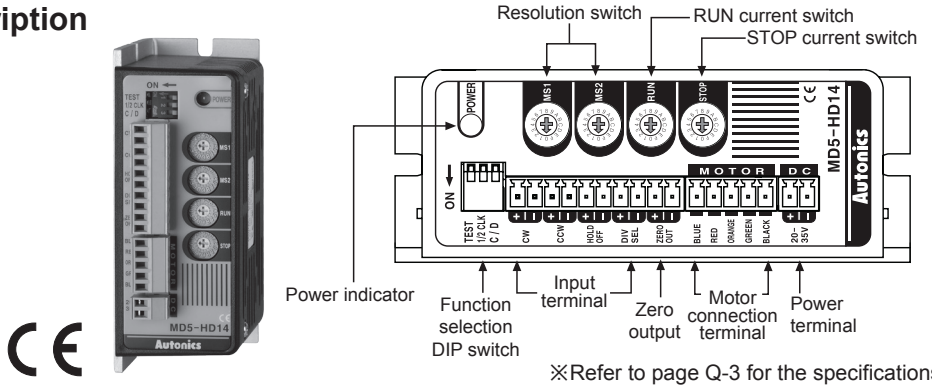

※Refer to page Q-3 for the specifications.

◎ Function selection DIP switch

	No.	Name	Function	Switch position	
				ON	OFF (default)
1 2 3 ON	1	TEST	Self diagnosis function	30rpm rotation	Not use
	2	1/2 CLK	Pulse input method	1-pulse input method	2-pulse input method
	3	C/D	Auto current down	Not use	Use

● TEST

- Self diagnosis function is for motor and driver test.
- This function makes the motor rotate with 30rpm in full step. Rotation speed varies with resolution settings.
- Rotation speed = 30rpm/resolution
- In 1-pulse input method, it rotates to CCW, and in 2-pulse input method, it rotates to CW.

※Be sure that the TEST switch is OFF before supplying the power.
If the TEST switch is ON, the motor operates immediately and it may be dangerous.

● 1/2 CLK

- 1/2 CLK switch is to select pulse input method.
- 1-pulse input method: CW → operating rotation signal input, CCW → rotation direction signal input ([H]: CW, [L]: CCW)
- 2-pulse input method: CW → CW rotation signal input, CCW → CCW rotation signal input.

● C/D (auto current down)

- This function is to reduce the current provided for motor automatically for preventing severe motor's heat when motor stops.
- If motor RUN pulse is not applied, the current provided for motor reduces as the set STOP current.

※Be sure that when motor RUN current is reduced, the stop torque of motor also reduced.
※Set the STOP current by the STOP current switch.

◎ RUN current

	Switch No.	0	1	2	3	4	5	6	7	8	9	A	B	C	D	E	F
	Current (A/Phase)	0.4	0.5	0.57	0.63	0.71	0.77	0.84	0.9	0.96	1.02	1.09	1.15	1.22	1.27	1.33	1.4

- RUN current setting is for the current provided for motor when the motor runs.

※When RUN current is increased, RUN torque of the motor is also increased.
※When RUN current is set too high, the heat is severe.
※Set RUN current within the range of motor's rated current according to its load.
※Change RUN current only when the motor stops.

◎ STOP current

	Switch No.	0	1	2	3	4	5	6	7	8	9	A	B	C	D	E	F
	%	27	31	36	40	45	50	54	58	62	66	70	74	78	82	86	90

- STOP current setting is for the current provided for motor when the motor stops for preventing severe motor's heat.
- This setting is applied when using C/D (current down) function.
- Setting value of STOP current is percentage (%) ratio of the set RUN current.
  E.g.) Set RUN current as 1.4A and STOP current as 40%.
  STOP current is set as 1.4A×0.4=0.56A

※When STOP current is decreased, STOP torque of the motor is also decreased.
※When STOP current is set too low, the heat is lower.
※Change STOP current only when the motor stops.

◎ Zero point excitation output signal (ZERO OUT)

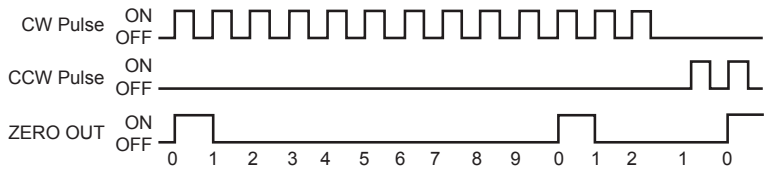

- This output indicates the initial step of excitation order of stepper motor and rotation position of motor axis.
- This signal outputs every 7.2° of rotation of the motor axis regardless of resolution.
  (50 outputs per 1 rotation of the motor.)
  E.g.) Full step: outputs one time by 10 pulses input, 20-division: outputs one time by 200 pulses input.

◎ HOLD OFF function

- This signal is for rotating motor's axis using external force or used for manual positioning.
- When hold off signal maintains over 1ms as [H], motor excitation is released.
- When hold off signal maintains over 1ms as [L], motor excitation is in a normal status.

※Must stop the motor for using this function.
※Refer to ▣ I/O Circuit and Connections.

◎ Microstep (microstep: resolution)

Switch No.	0	1	2	3	4	5	6	7	8	9	A	B	C	D	E	F
Resolution	1	2	4	5	8	10	16	20	25	40	50	80	100	125	200	250
Step angle	0.72°	0.36°	0.18°	0.144°	0.09°	0.072°	0.045°	0.036°	0.0288°	0.018°	0.0144°	0.009°	0.0072°	0.00576°	0.0036°	0.00288°

- **Resolution (same as MS1, MS2)**
- The MS1, MS2 switches is for resolution setting.
- Select MS2 or MS2 by DIVISION SELECTION signal ([L]: MS1, [H]: MS2)
- Select the step angle (motor rotation angle per 1 pulse).
- The set step angle is dividing basic step angle (0.72°) of 5-phase stepper motor by setting value.
- The calculation formula of divided step angle is as below.

$$\text{Set step angle} = \frac{\text{Basic step angle (0.72°)}}{\text{Resolution}}$$

- When using geared type motor, the angle is step angle divided by gear ratio.
  Step angle / gear ratio = Step angle applied gear
  E.g) 0.72° / 10 (1:10) = 0.072°

※Must stop the motor before changing the resolution.

▣ I/O Circuit and Connections

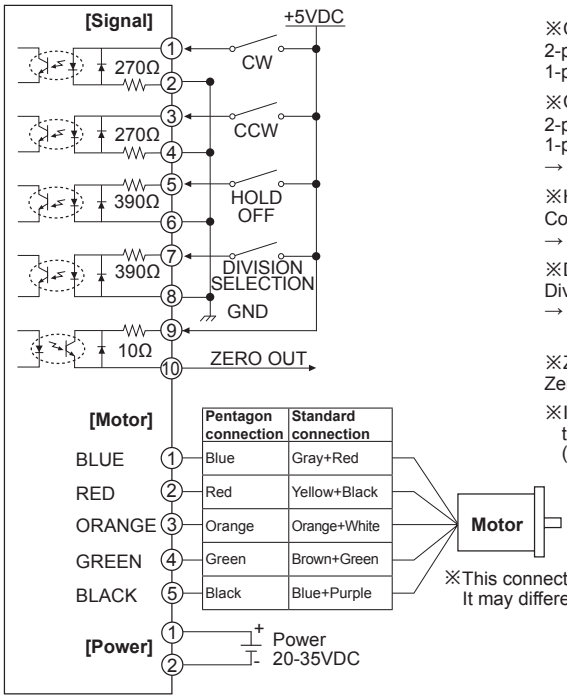

Pentagon connection	Standard connection
Blue	Gray+Red
Red	Yellow+Black
Orange	Orange+White
Green	Brown+Green
Black	Blue+Purple

※CW
2-pulse input method (CW rotation signal input)
1-pulse input method (operating rotation signal input)

※CCW
2-pulse input method (CCW rotation signal input)
1-pulse input method (rotation direction signal input)
→ [H]: CW, [L]: CCW

※HOLD OFF
Control signal for motor excitation OFF
→ [H]: Motor excitation OFF

※DIVISION SELECTION
Division selection signal
→ [L]: Operated by MS1 setting resolution
[H]: Operated by MS2 setting resolution

※ZERO OUT
Zero point excitation output signal → Zero point status ON

※If the power for driving pulse from external is over than +5VDC, please connect resistor at the outside. (input power max. 24VDC, input current 10-20mA)

※This connection cable color is only for Autonics motors.
It may different cable color when using other motors.

■ Connections

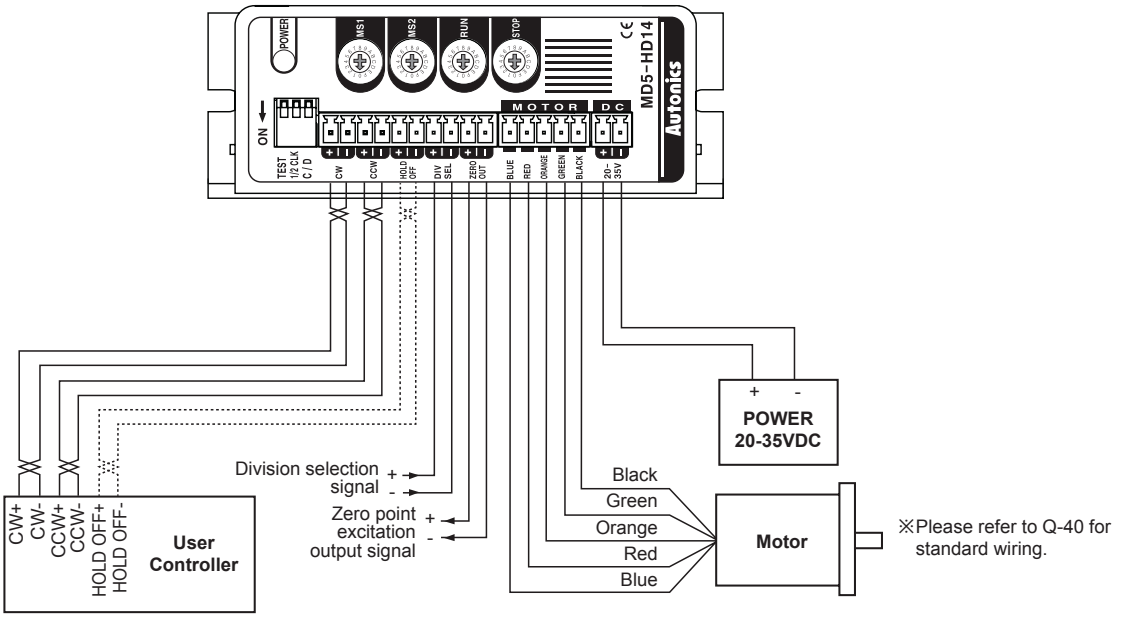

■ Dimensions

(unit: mm)

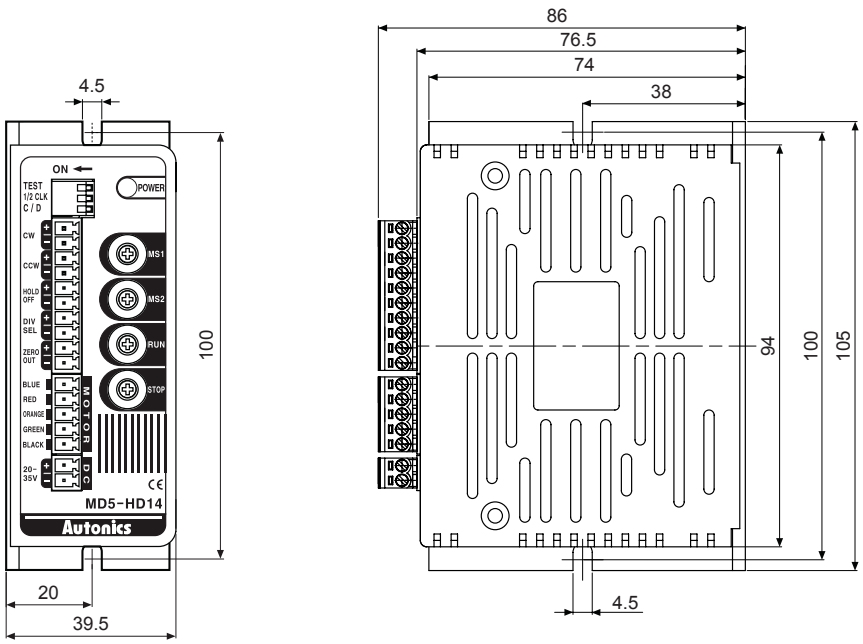

5-Phase Micro Stepper Motor Driver [MD5-HF14]

▣ Unit Description

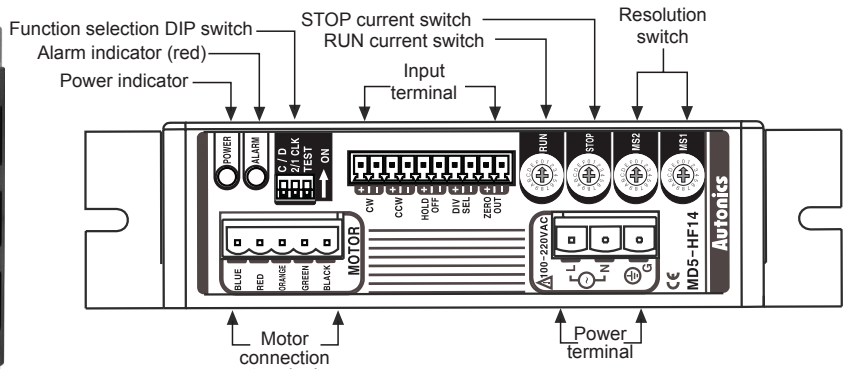

※Refer to page Q-3 for the specifications.

◎ Function selection DIP switch

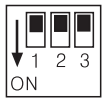

No.	Name	Function	Switch position	
			ON	OFF (default)
1	TEST	Self diagnosis function	30rpm rotation	Not use
2	2/1 CLK	Pulse input method	1-pulse input method	2-pulse input method
3	C/D	Auto current down	Not use	Use

● TEST

- Self diagnosis function is for motor and driver test.
- This function makes the motor rotate with 30rpm in full step. Rotation speed varies with resolution settings.
- Rotation speed = 30rpm/resolution
- In 1-pulse input method, it rotates to CCW, and in 2-pulse input method, it rotates to CW.

※Be sure that the TEST switch is OFF before supplying the power.
If the TEST switch is ON, the motor operates immediately and it may be dangerous.

● 2/1 CLK

- 2/1 CLK switch is to select pulse input method.
- 1-pulse input method: CW → operating rotation signal input, CCW → rotation direction signal input ([H]: CW, [L]: CCW)
- 2-pulse input method: CW → CW rotation signal input, CCW → CCW rotation signal input.

● C/D (auto current down)

- This function is to reduce the current provided for motor automatically for preventing severe motor's heat when motor stops.
- If motor RUN pulse is not applied, the current provided for motor reduces as the set STOP current.

※Be sure that when motor RUN current is reduced, the stop torque of motor also reduced.
※Set the STOP current by the STOP current switch.

◎ RUN current

Switch No.	0	1	2	3	4	5	6	7	8	9	A	B	C	D	E	F
Current (A/Phase)	0.4	0.5	0.57	0.63	0.71	0.77	0.84	0.9	0.96	1.02	1.09	1.15	1.22	1.27	1.33	1.4

- RUN current setting is for the current provided for motor when the motor runs.

※When RUN current is increased, RUN torque of the motor is also increased.
※When RUN current is set too high, the heat is severe.
※Set RUN current within the range of motor's rated current according to its load.
※Change RUN current only when the motor stops.

◎ STOP current

Switch No.	0	1	2	3	4	5	6	7	8	9	A	B	C	D	E	F
%	27	31	36	40	45	50	54	58	62	66	70	74	78	82	86	90

- STOP current setting is for the current provided for motor when the motor stops for preventing severe motor's heat.
- This setting is applied when using C/D (current down) function.
- Setting value of STOP current is percentage (%) ratio of the set RUN current.
  E.g.) Set RUN current as 1.4A and STOP current as 40%.
  STOP current is set as 1.4A×0.4=0.56A

※When STOP current is decreased, STOP torque of the motor is also decreased.
※When STOP current is set too low, the heat is lower.
※Change STOP current only when the motor stops.

◎ Zero point excitation output signal (ZERO OUT)

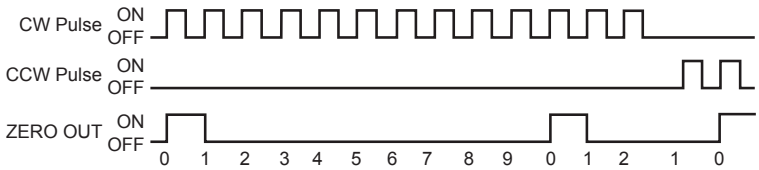

- This output indicates the initial step of excitation order of stepper motor and rotation position of motor axis .
- This signal outputs every 7.2° of rotation of the motor axis regardless of resolution.
  (50 outputs per 1 rotation of the motor.)
  E.g.) Full step: outputs one time by 10 pulses input, 20-division: outputs one time by 200 pulses input.

◎ HOLD OFF function

- This signal is for rotating motor's axis using external force or used for manual positioning.
- When hold off signal maintains over 1ms as [H], motor excitation is released.
- When hold off signal maintains over 1ms as [L], motor excitation is in a normal status.

※Must stop the motor for using this function.
※Refer to ▣ I/O Circuit and Connections.

◎ Microstep (microstep: resolution)

Switch No.	0	1	2	3	4	5	6	7	8	9	A	B	C	D	E	F
Resolution	1	2	4	5	8	10	16	20	25	40	50	80	100	125	200	250
Step angle	0.72°	0.36°	0.18°	0.144°	0.09°	0.072°	0.045°	0.036°	0.0288°	0.018°	0.0144°	0.009°	0.0072°	0.00576°	0.0036°	0.00288°

- **Resolution (same as MS1, MS2)**
- The MS1, MS2 switches is for resolution setting.
- Select MS2 or MS2 by DIVISION SELECTION signal ([L]: MS1, [H]: MS2)
- Select the step angle (motor rotation angle per 1 pulse).
- The set step angle is dividing basic step angle (0.72°) of 5-phase stepper motor by setting value.
- The calculation formula of divided step angle is as follow.

$$\text{Set step angle} = \frac{\text{Basic step angle (0.72°)}}{\text{Resolution}}$$

- When using geared type motor, the angle is step angle divided by gear ratio.
  Step angle / gear ratio = Step angle applied gear
  E.g) 0.72° / 10 (1:10) = 0.072°

※Must stop the motor before changing the resolution.

◎ Alarm output function

- Overheat: When the temperature of driver base is over 80℃, alarm indicator (red) turns ON and motor stops with holding the excision. Turn OFF the power and remove the causes. Turn ON the power and alarm output is OFF.
- Overcurrent: When overcurrent is applied from motor damage by burn, driver damage, or error, alarm LED (red) is flashed. When overcurrent occurs, the motor becomes HOLD OFF. Turn OFF the power and remove the causes to normal operation.

▣ I/O Circuit and Connections

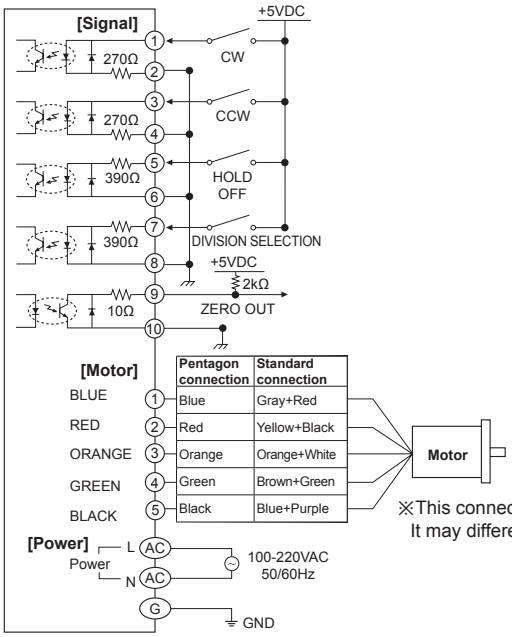

※CW
2-pulse input method (CW rotation signal input)
1-pulse input method (operating rotation signal input)
※CCW
2-pulse input method (CCW rotation signal input)
1-pulse input method (rotation direction signal input)
→ [H]: CW, [L]: CCW
※HOLD OFF
Control signal for motor excitation OFF
→ [H]: Motor excitation OFF
※DIVISION SELECTION
Division selection signal
→ [L]: Operated by switch MS1
[H]: Operated by switch MS2
※ZERO OUT
Zero point excitation output signal → Zero point status ON

※If the power for driving pulse from external is over than +5VDC, please connect resistor at the outside. (input power max. 24VDC, input current 10-20mA)

※This connection cable color is only for Autonics motors.
It may different cable color when using other motors.

■ Connections

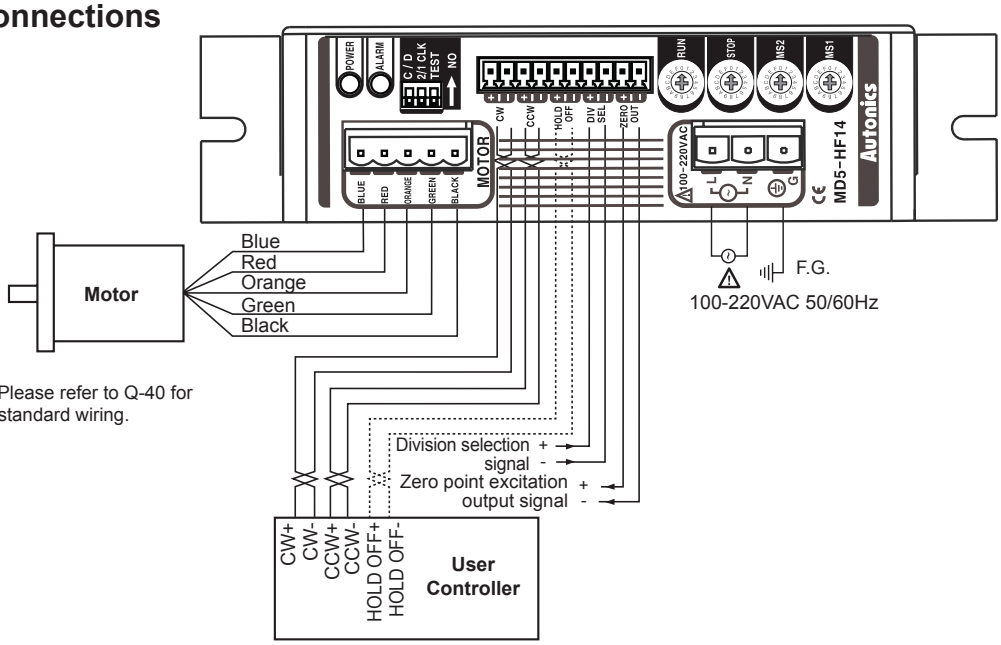

■ Dimensions

(unit: mm)

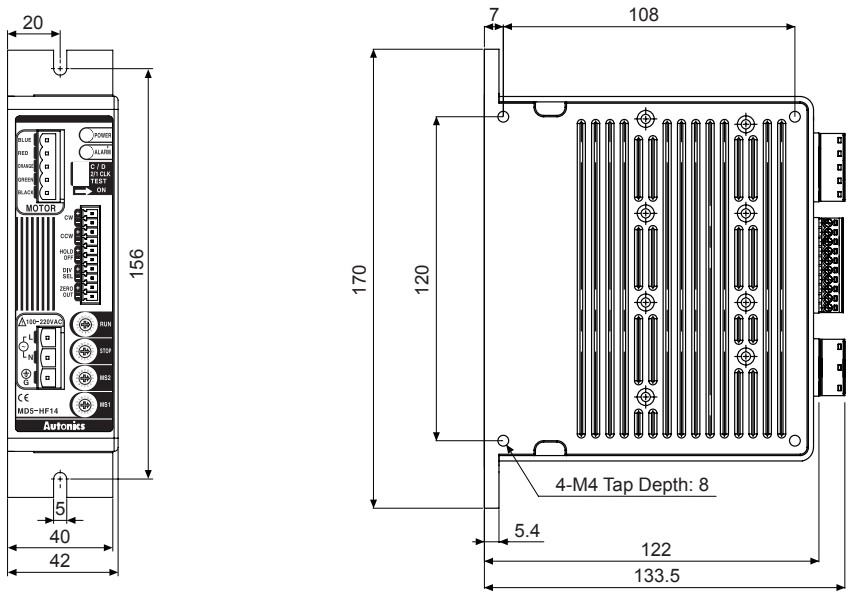

5-Phase Micro Stepper Motor Driver [MD5-HF14-AO]

▣ Unit Description

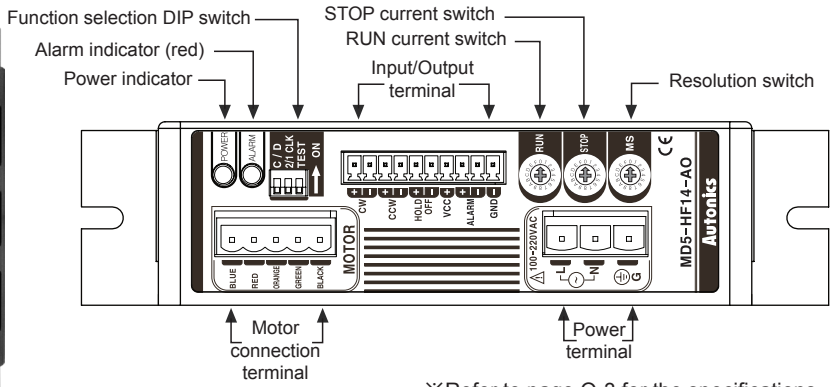

※Refer to page Q-3 for the specifications.

◎ Function selection DIP switch

No.	Name	Function	Switch position	
			ON	OFF (default)
1	TEST	Self diagnosis function	30rpm rotation	Not use
2	2/1 CLK	Pulse input method	1-pulse input method	2-pulse input method
3	C/D	Auto current down	Not use	Use

● TEST

- Self diagnosis function is for motor and driver test.
- This function makes the motor rotate with 30rpm in full step. Rotation speed varies with resolution settings.
- Rotation speed = 30rpm/resolution
- In 1-pulse input method, it rotates to CCW, and in 2-pulse input method, it rotates to CW.

※Be sure that the TEST switch is OFF before supplying the power.
If the TEST switch is ON, the motor operates immediately and it may be dangerous.

● 2/1 CLK

- 2/1 CLK switch is to select pulse input method.
- 1-pulse input method: CW → operating rotation signal input, CCW → rotation direction signal input ([H]: CW, [L]: CCW)
- 2-pulse input method: CW → CW rotation signal input, CCW → CCW rotation signal input.

● C/D (auto current down)

- This function is to reduce the current provided for motor automatically for preventing severe motor's heat when motor stops.
- If motor RUN pulse is not applied, the current provided for motor reduces as the set STOP current.

※Be sure that when motor RUN current is reduced, the stop torque of motor also reduced.
※Set the STOP current by the STOP current switch.

◎ RUN current

Switch No.	0	1	2	3	4	5	6	7	8	9	A	B	C	D	E	F
Current (A/Phase)	0.4	0.5	0.57	0.63	0.71	0.77	0.84	0.9	0.96	1.02	1.09	1.15	1.22	1.27	1.33	1.4

- RUN current setting is for the current provided for motor when the motor runs.

※When RUN current is increased, RUN torque of the motor is also increased.
※When RUN current is set too high, the heat is severe.
※Set RUN current within the range of motor's rated current according to its load.
※Change RUN current only when the motor stops.

◎ STOP current

Switch No.	0	1	2	3	4	5	6	7	8	9	A	B	C	D	E	F
%	27	31	36	40	45	50	54	58	62	66	70	74	78	82	86	90

- STOP current setting is for the current provided for motor when the motor stops for preventing severe motor's heat.
- This setting is applied when using C/D (current down) function.
- Setting value of STOP current is percentage (%) ratio of the set RUN current.
  E.g.) Set RUN current as 1.4A and STOP current as 40%.
  STOP current is set as 1.4A×0.4=0.56A

※When STOP current is decreased, STOP torque of the motor is also decreased.
※When STOP current is set too low, the heat is lower.
※Change STOP current only when the motor stops.

◎ HOLD OFF function

- This signal is for rotating motor's axis using external force or used for manual positioning.
- When hold off signal maintains over 1ms as [H], motor excitation is released.
- When hold off signal maintains over 1ms as [L], motor excitation is in a normal status.

※Must stop the motor for using this function.
※Refer to ▣ I/O Circuit and Connections.

◎ Microstep (microstep: resolution)

Switch No.	0	1	2	3	4	5	6	7	8	9	A	B	C	D	E	F
Resolution	1	2	4	5	8	10	16	20	25	40	50	80	100	125	200	250
Step angle	0.72°	0.36°	0.18°	0.144°	0.09°	0.072°	0.045°	0.036°	0.0288°	0.018°	0.0144°	0.009°	0.0072°	0.00576°	0.0036°	0.00288°

● **Resolution (MS1)**

- The set step angle is dividing basic step angle (0.72°) of 5-phase stepper motor by setting value.
- The calculation formula of divided step angle is as below.

$$\text{Set step angle} = \frac{\text{Basic step angle (0.72°)}}{\text{Resolution}}$$

- When using geared type motor, the angle is step angle divided by gear ratio.
  Step angle / gear ratio = Step angle applied gear
  E.g) 0.72° / 10 (1:10) = 0.072°

※Must stop the motor before changing the resolution.

◎ Alarm output function

- Overheat: When the temperature of driver base is over 80℃, alarm indicator (red) turns ON and motor stops with holding the excision. Turn OFF the power and remove the causes. Turn ON the power and alarm output is OFF.
- Overcurrent: When overcurrent is applied from motor damage by burn, driver damage, or error, alarm LED (red) is flashed. When overcurrent occurs, the motor becomes HOLD OFF. Turn OFF the power and remove the causes to normal operation.

▣ I/O Circuit and Connections

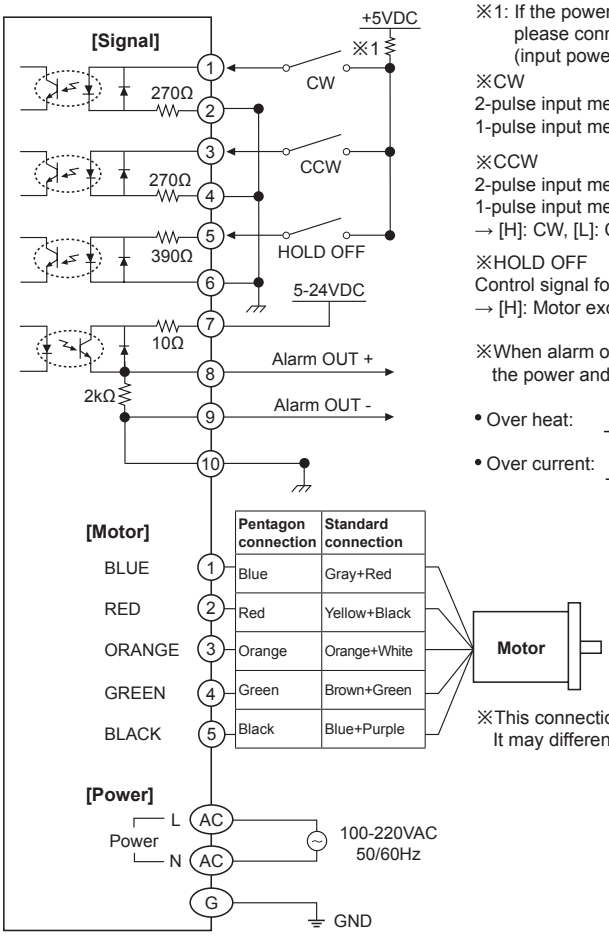

Pentagon connection	Standard connection
Blue	Gray+Red
Red	Yellow+Black
Orange	Orange+White
Green	Brown+Green
Black	Blue+Purple

※1: If the power for driving pulse from external is over than +5VDC, please connect resistor at the outside.
(input power max. 24VDC, input current 10-24mA)

※CW
2-pulse input method (CW rotation signal input)
1-pulse input method (operating rotation signal input)

※CCW
2-pulse input method (CCW rotation signal input)
1-pulse input method (rotation direction signal input)
→ [H]: CW, [L]: CCW

※HOLD OFF
Control signal for motor excitation OFF
→ [H]: Motor excitation OFF

※When alarm occurs, the motor becomes HOLD OFF. Turn OFF the power and remove the causes to normal operation.

- Over heat:
- Over current:

※This connection cable color is only for Autonics motors.
It may different cable color when using other motors.

■ Connections

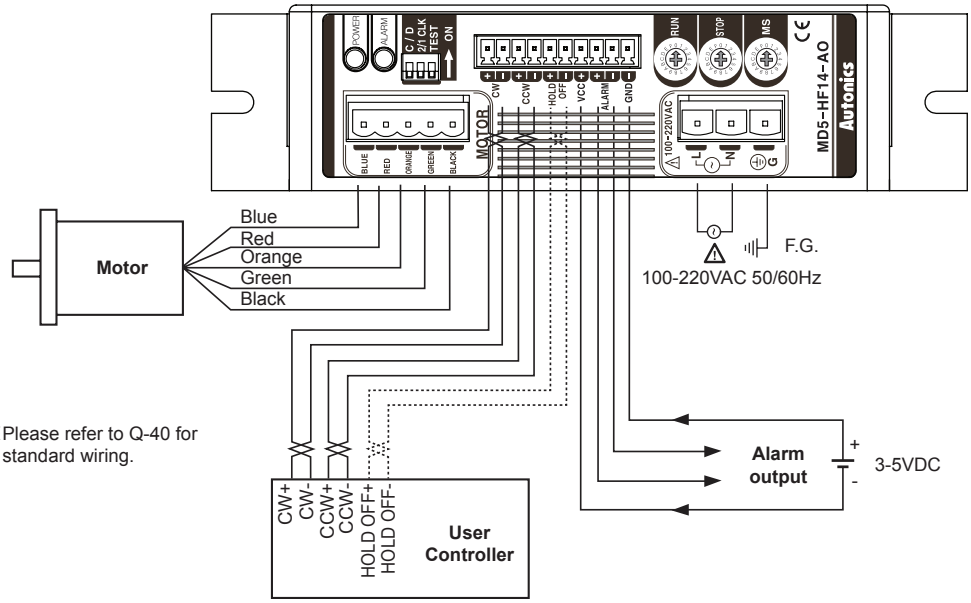

■ Dimensions

(unit: mm)

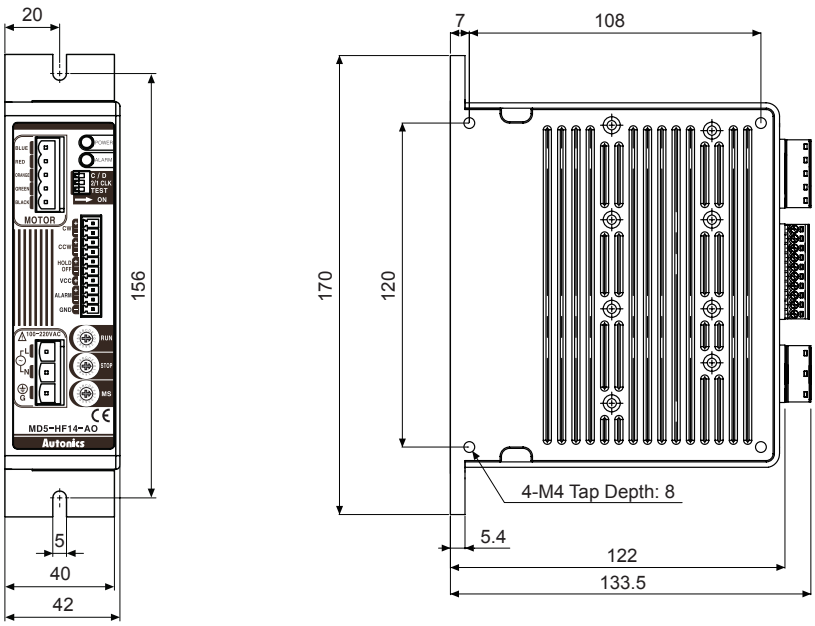

5-Phase Microstep Motor Driver [MD5-HF28]

▣ Unit Description

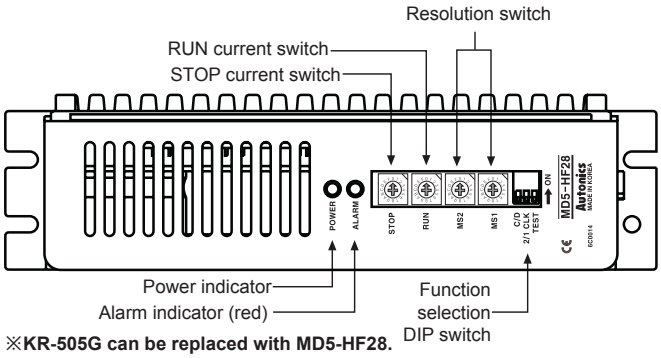

※KR-505G can be replaced with MD5-HF28.
※Power supply 100-220VAC and socket type wire terminal blocks are upgraded comparing to KR Series.

※Refer to page Q-3 for the specifications.

◎ Function selection DIP switch

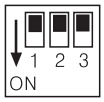

No.	Name	Function	Switch position	
			ON	OFF (default)
1	TEST	Self diagnosis function	30rpm rotation	Not use
2	2/1 CLK	Pulse input method	1-pulse input method	2-pulse input method
3	C/D	Auto Current Down	Not use	Use

● TEST
- Self diagnosis function is for motor and driver test.
- This function makes the motor rotate with 30rpm in full step. Rotation speed varies with resolution settings.
- Rotation speed = 30rpm/resolution
- In 1-pulse input method, it rotates to CCW, and in 2-pulse input method, it rotates to CW.

※Be sure that the TEST switch is OFF before supplying the power.
If the TEST switch is ON, the motor operates immediately and it may be dangerous.

● 2/1 CLK
- 2/1 CLK switch is to select pulse input method.
- 1-pulse input method: CW → operating rotation signal input, CCW → rotation direction signal input ([H]: CW, [L]: CCW)
- 2-pulse input method: CW → CW rotation signal input, CCW → CCW rotation signal input.

● C/D (auto current down)
- This function is to reduce the current provided for motor automatically for preventing severe motor's heat when motor stops.
- If motor RUN pulse is not applied, the current provided for motor reduces as the set STOP current.

※Be sure that when motor RUN current is reduced, the stop torque of motor also reduced.
※Set the STOP current by the STOP current switch.

◎ RUN current

Switch No.	0	1	2	3	4	5	6	7	8	9	A	B	C	D	E	F
Current (A/Phase)	1.14	1.25	1.36	1.50	1.63	1.74	1.86	1.97	2.10	2.20	2.30	2.40	2.50	2.60	2.78	2.88

- RUN current setting is for the current provided for motor when the motor runs.

※When RUN current is increased, RUN torque of the motor is also increased.
※When RUN current is set too high, the heat is severe.
※Set RUN current within the range of motor's rated current according to its load.
※Change RUN current only when the motor stops.

◎ STOP current

Switch No.	0	1	2	3	4	5	6	7	8	9	A	B	C	D	E	F
%	27	31	36	40	45	50	54	58	62	66	70	74	78	82	86	90

- STOP current setting is for the current provided for motor when the motor stops for preventing severe motor's heat.
- This setting is applied when using C/D (current down) function.
- Setting value of STOP current is percentage (%) ratio of the set RUN current.
  E.g.) Set RUN current as 2.5A and STOP current as 40%.
  STOP current is set as 2.5A×0.4=1A

※When STOP current is decreased, STOP torque of the motor is also decreased.
※When STOP current is set too low, the heat is lower.
※Change STOP current only when the motor stops.

◎ Zero point excitation output signal (ZERO OUT)

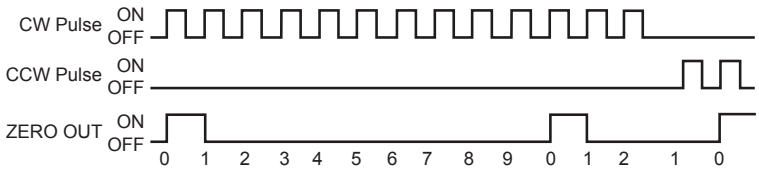

- This output indicates the initial step of excitation order of stepper motor and rotation position of motor axis .
- This signal outputs every 7.2° of rotation of the motor axis regardless of resolution.
  (50 outputs per 1 rotation of the motor.)
  E.g.) Full step: outputs one time by 10 pulses input, 20-division: outputs one time by 200 pulses input.

◎ HOLD OFF function

- This signal is for rotating motor's axis using external force or used for manual positioning.
- When hold off signal maintains over 1ms as [H], motor excitation is released.
- When hold off signal maintains over 1ms as [L], motor excitation is in a normal status.

※Must stop the motor for using this function.
※Refer to ▣ I/O Circuit and Connections.

◎ Microstep (microstep: resolution)

Switch No.	0	1	2	3	4	5	6	7	8	9	A	B	C	D	E	F
Resolution	1	2	4	5	8	10	16	20	25	40	50	80	100	125	200	250
Step angle	0.72°	0.36°	0.18°	0.144°	0.09°	0.072°	0.045°	0.036°	0.0288°	0.018°	0.0144°	0.009°	0.0072°	0.00576°	0.0036°	0.00288°

- **Resolution (same as MS1, MS2)**
- The MS1, MS2 switches is for resolution setting.
- Select MS2 or MS2 by DIVISION SELECTION signal ([L]: MS1, [H]: MS2)
- Select the step angle (motor rotation angle per 1 pulse).
- The set step angle is dividing basic step angle (0.72°) of 5-phase stepper motor by setting value.
- The calculation formula of divided step angle is as follow.

$$\text{Set step angle} = \frac{\text{Basic step angle (0.72°)}}{\text{Resolution}}$$

- When using geared type motor, the angle is step angle divided by gear ratio.
  Step angle / gear ratio = Step angle applied gear E.g) 0.72° / 10 (1:10) = 0.072°

※Must stop the motor before changing the resolution.

◎ Alarm output function

- Overheat: When the temperature of driver base is over 80℃, alarm indicator (red) turns ON and motor stops with holding the excision. Turn OFF the power and remove the causes. Turn ON the power and alarm output is OFF.
- Overcurrent: When overcurrent is applied from motor damage by burn, driver damage, or error, alarm LED (red) is flashed. When overcurrent occurs, the motor becomes HOLD OFF. Turn OFF the power and remove the causes to normal operation.

▣ I/O Circuit and Connections

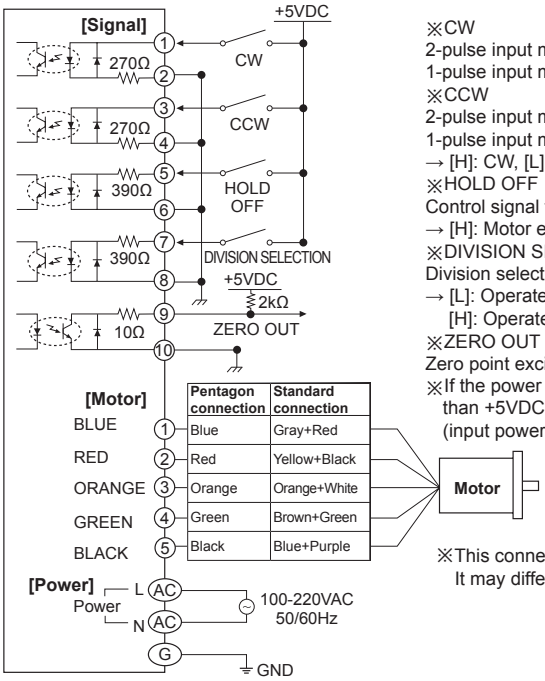

Pentagon connection	Standard connection
Blue	Gray+Red
Red	Yellow+Black
Orange	Orange+White
Green	Brown+Green
Black	Blue+Purple

※CW
2-pulse input method (CW rotation signal input)
1-pulse input method (operating rotation signal input)
※CCW
2-pulse input method (CCW rotation signal input)
1-pulse input method (rotation direction signal input)
→ [H]: CW, [L]: CCW
※HOLD OFF
Control signal for motor excitation OFF
→ [H]: Motor excitation OFF
※DIVISION SELECTION
Division selection signal
→ [L]: Operated by switch MS1
[H]: Operated by switch MS2
※ZERO OUT
Zero point excitation output signa → Zero point status ON
※If the power for driving pulse from external is over than +5VDC, please connect resistor at the outside. (input power max. 24VDC, input current 10-20mA)

※This connection cable color is only for Autonics motors.
It may different cable color when using other motors.

■ Connections

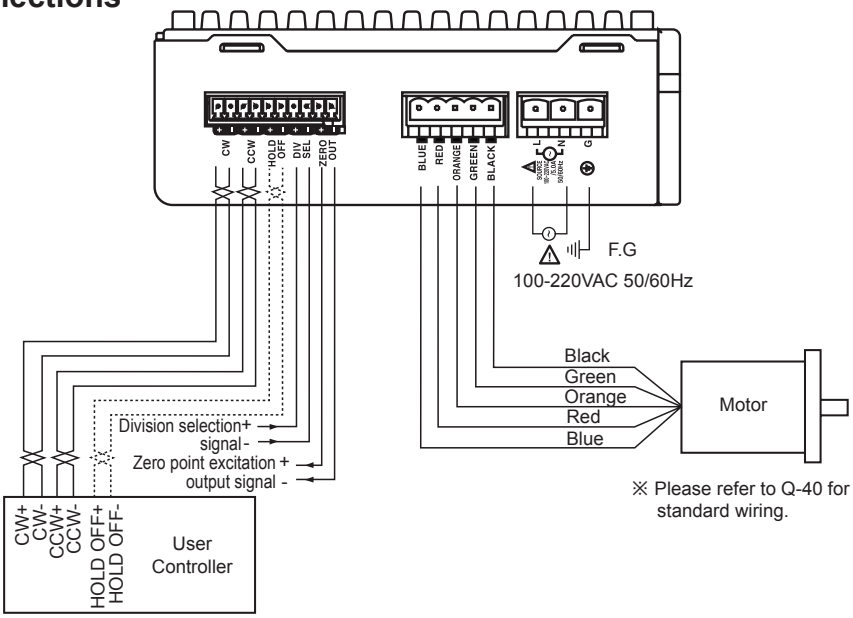

※ Please refer to Q-40 for standard wiring.

■ Dimensions

(unit: mm)

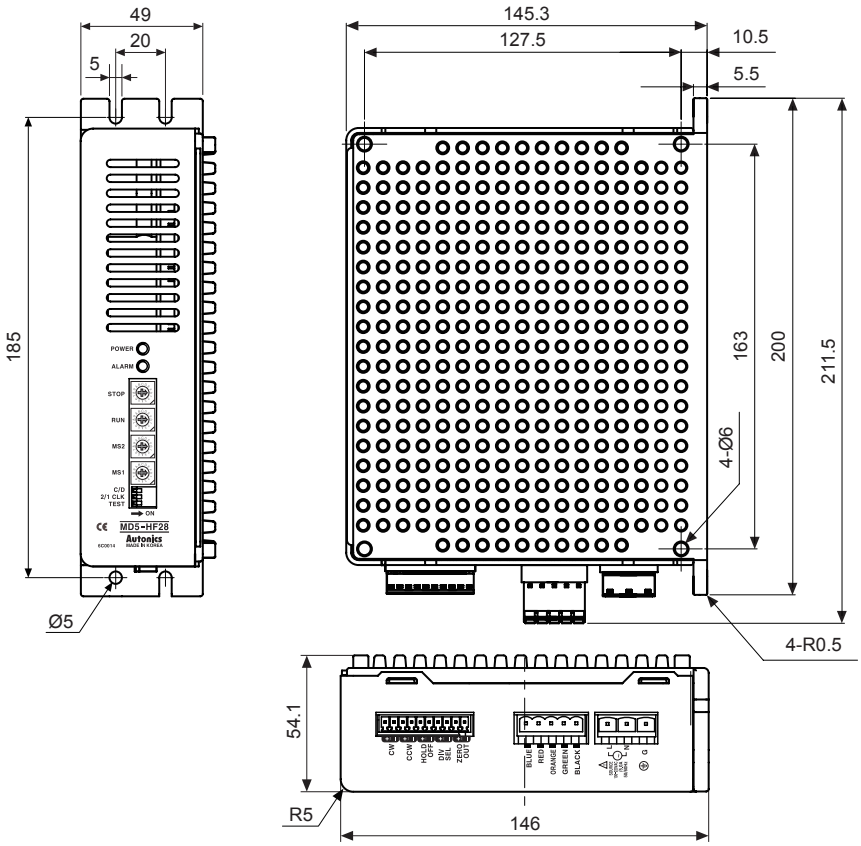

5-Phase Stepper Motor Driver [MD5-ND14]

▣ Unit Description

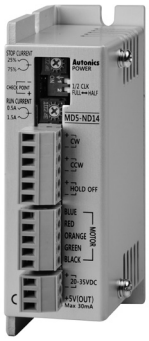

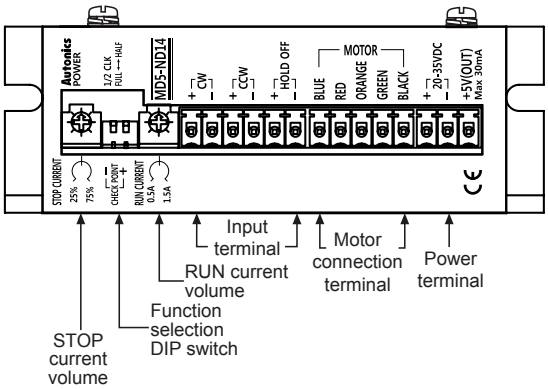

※Refer to page Q-3 for the specifications.

◎ Function selection DIP switch

	No.	Nameplate	Function	Switch position	
				ON	OFF (default)
ON 1 2	1	1/2 CLK	Pulse input method	1-pulse input method	2-pulse input method
	2	FULL↔HALF	Select resolution	1-division (0.72°)	2-division (0.36°)

※Changing pulse input method or resolution is available only when stepper motor stops.
If changing the resolution during operation, the motor may be out of phase.

● 1/2 CLK

- 1/2 CLK switch is to select pulse input method.
- 1-pulse input method: CW → operating rotation signal input, CCW → rotation direction signal input ([H]: CW, [L]: CCW)
- 2-pulse input method: CW → CW rotation signal input, CCW → CCW rotation signal input.

● FULL ↔ HALF

- FULL ↔ HALF switch is to set basic step angle for 5 phase stepper motor.

※Change resolution only when the motor stops.

◎ RUN current

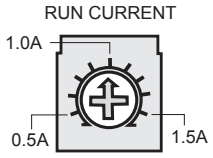

- RUN current setting is for the current provided for motor when the motor runs.

※When RUN current is increased, RUN torque of the motor is also increased.
※When RUN current is set too high, the heat is severe.
※Set RUN current within the range of motor's rated current according to its load.
※Change RUN current only when the motor stops.

◎ STOP current

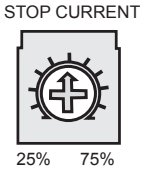

- STOP current setting is for the current provided for motor when the motor stops.
- Setting value of STOP current is percentage (%) ratio of the set RUN current.
  E.g.) Set RUN current as 1.4A and STOP current as 40%.
  STOP current is set as 1.4A×0.4=0.56A.

※When STOP current is decreased, STOP torque of the motor is also decreased.
※When STOP current is set too low, the heat is lower.
※Change STOP current only when the motor stops.

◎ HOLD OFF function

- This signal is for rotating motor's axis using external force or used for manual positioning.
- When hold off signal maintains over 1ms as [H], motor excitation is released.
- When hold off signal maintains over 1ms as [L], motor excitation is in a normal status.

※Must stop the motor for using this function.
※Refer to ▣ I/O Circuit and Connections.

■ I/O Circuit and Connections

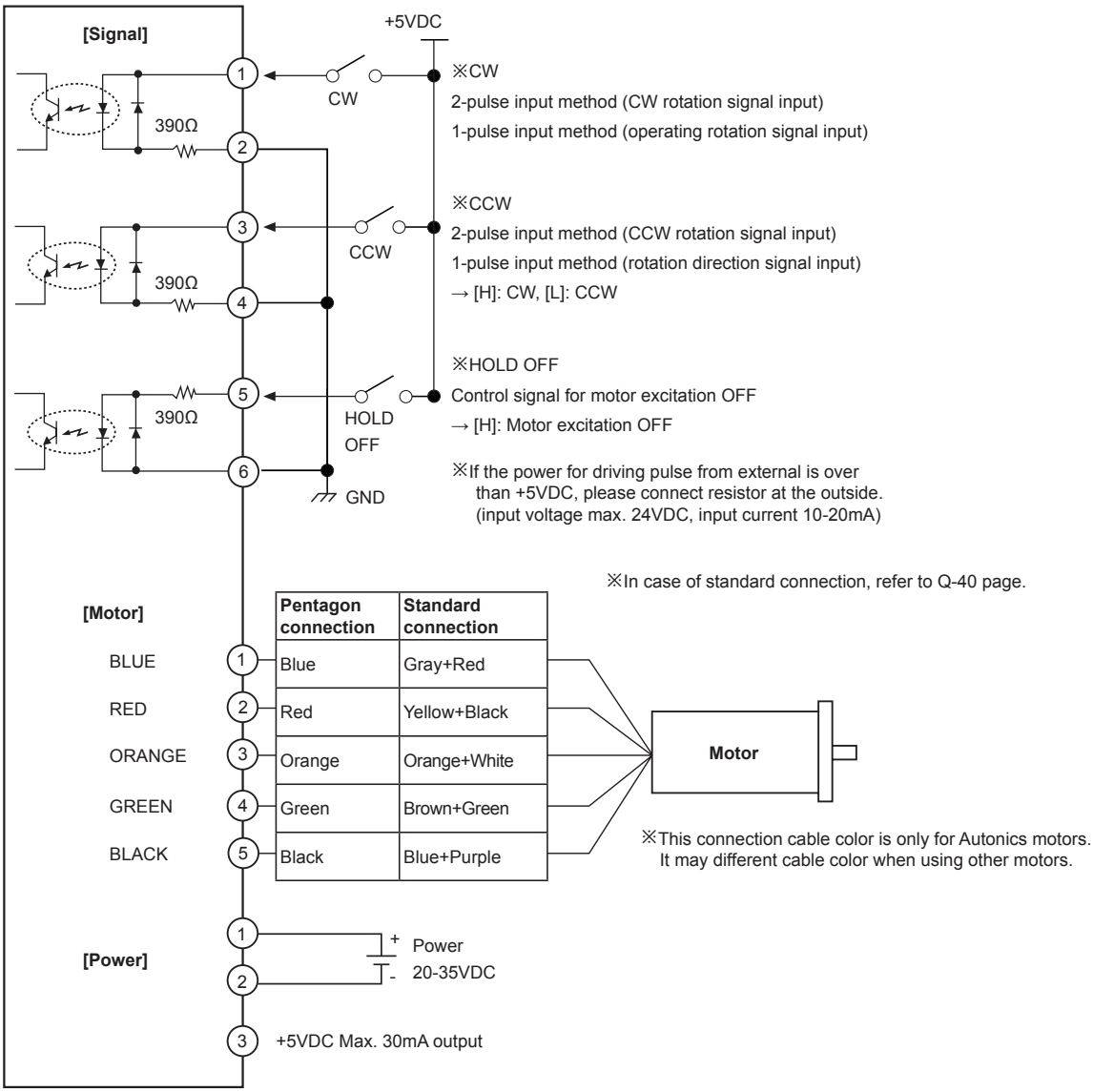

	Pentagon connection	Standard connection
1 BLUE	Blue	Gray+Red
2 RED	Red	Yellow+Black
3 ORANGE	Orange	Orange+White
4 GREEN	Green	Brown+Green
5 BLACK	Black	Blue+Purple

■ Time Chart

◎ 1-pulse input method

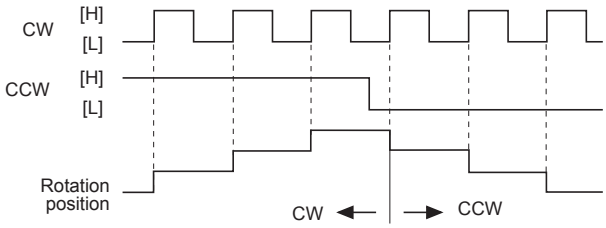

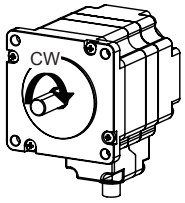

◎ 2-pulse input method

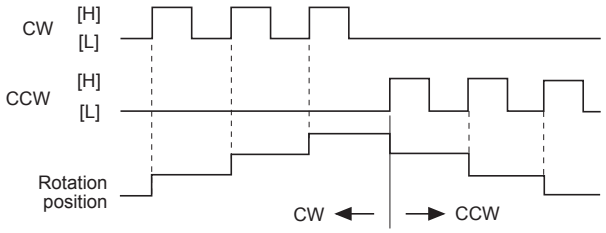

※Do not input CW, CCW signals at the same time in 2-pulse input method.
It may not operate properly if another direction signal is inputted when one of CW or CCW is [H].

■ Dimensions

(unit: mm)

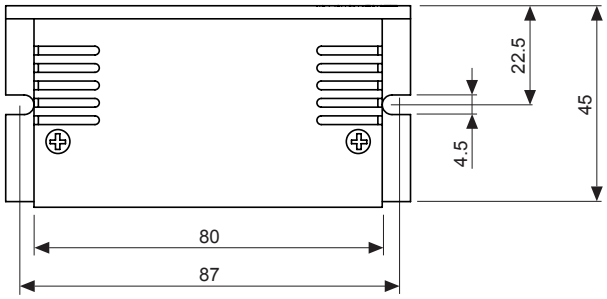

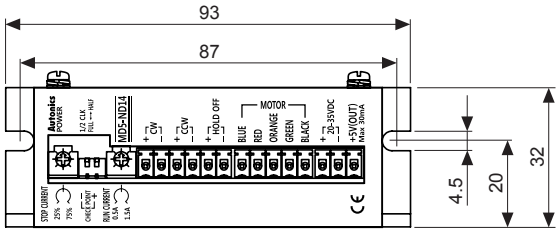

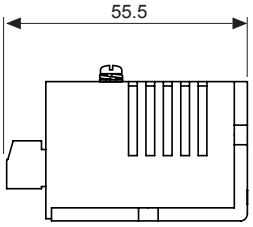

Low Noise, Low Vibration Multi Axis 5-Phase Stepper Motor Driver

■ Features

- **Simultaneous operation of 2, 3-axis by single power supply 20-35VDC**
- Small, light weight and advanced quality by custom IC and surface mounted circuit
- Realizing low noise, low vibration rotation with microstep-driving
- Low speed rotation and high accuracy controlling with microstep-driving
- Max. resolution - 250 division: In case of 5-phase stepper motor of which basic step angle is 0.72°, it enables to control up to 0.00288° per pulse
- Includes auto current down and self-diagnosis function
- Photocoupler input insulation method to minimize the effects from external noise

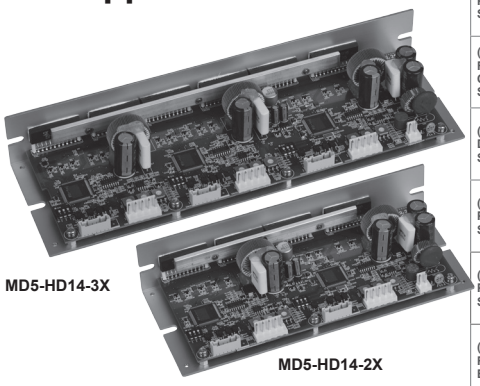

⚠ **Please read "Safety Considerations" in operation manual before using.**

CE

■ Ordering Information

MD 5 – H D 14 – 2X

Axis	2X	2-axis
	3X	3-axis※1
RUN current	14	1.4A/Phase
Power supply	D	20-35VDC
Step type (resolution)	H	Micro step (250-division)
Motor phase	5	5-Phase
Item	MD	Motor Driver

※1: Built-in zero point excitation output signal is optional.

■ Specifications

Model		MD5-HD14-2X	MD5-HD14-3X
Power supply※1		20-35VDC⎓	
Allowable voltage fluctuation range		90 to 110% of the rated voltage	
Max. current consumption※2		5A	7A
RUN current※3		0.4-1.4A/Phase	
STOP current		27 to 90% of RUN current (set by STOP current switch)	
Drive method		Bipolar constant current pentagon drive	
Basic step angle		0.72°/Step	
Resolution		1, 2, 4, 5, 8, 10, 16, 20, 25, 40, 50, 80, 100, 125, 200, 250-division (0.72° to 0.00288°/Step)	
Input pulse characteristic	Pulse width	Min. 1μs (CW, CCW), Min. 1ms (HOLD OFF)	
	Duty rate	50% (CW, CCW)	
	Rising/Falling time	Below 130ns (CW, CCW)	
	Pulse input voltage	[H]: 4-8VDC⎓, [L]: 0-0.5VDC	
	Pulse input current	7.5-14mA (CW, CCW), 10-16mA (HOLD OFF, ZERO OUT)	
	Max. input pulse frequency※4	Max. 500kHz (CW, CCW)	
Input resistance		270Ω (CW, CCW), 390Ω (HOLD OFF), 10Ω (ZERO OUT)	
Insulation resistance		Over 100MΩ (at 500VDC megger, between all terminals and base)	
Dielectric strength		1,000VAC 50/60Hz for 1min (between all terminals and base)	
Noise immunity		±500V the square wave noise (pulse width: 1μs) by the noise simulator	
Vibration	Mechanical	1.5mm amplitude at frequency 5 to 60Hz (for 1 min) in each X, Y, Z direction for 2 hours	
	Malfunction	1.5mm amplitude at frequency 5 to 60Hz (for 1 min) in each X, Y, Z direction for 10 min	
Environ-ment	Ambient temp.	0 to 40℃, storage: -10 to 60℃	
	Ambient humi.	35 to 85%RH, storage: 35 to 85%RH	
Approval		CE	
Weight※5		Approx. 446g (approx. 292g)	Approx. 597g (approx. 411g)

※1: When using over 30VDC power supply, torque characteristics are improved but the driver temperature raise. The unit should be installed at the well ventilation environment.
※2: Based on ambient temperature 25℃, ambient humidity 55%RH.
※3: RUN current varies depending on the input RUN frequency and max. RUN current at the moment varies also varies depending on the load.
※4: Max. input pulse frequency is max. frequency to be input and does not same as max. pull-out frequency or max. slewing frequency.
※5: The weight includes packaging. The weight in parenthesis is for unit only.
※Environment resistance is rated at no freezing or condensation.

▣ Functions

◎ Function selection DIP switch

No.	Name	Function	Switch position	
			ON	OFF (default)
1	TEST	Self diagnosis function	30rpm rotation	Not use
2	1/2 CLK	Pulse input method	1-pulse input method	2-pulse input method
3	C/D	Auto Current Down	Not use	Use

● TEST

- Self diagnosis function is for motor and driver test.
- This function makes the motor rotate with 30rpm in full step. Rotation speed varies with resolution settings.
- Rotation speed = 30rpm/resolution
- In 1-pulse input method, it rotates to CCW, and in 2-pulse input method, it rotates to CW.

※Be sure that the TEST switch is OFF before supplying the power.
If the TEST switch is ON, the motor operates immediately and it may be dangerous.

● 1/2 CLK

- 1/2 CLK switch is to select pulse input method.
- 1-pulse input method: CW → operating rotation signal input, CCW → rotation direction signal input ([H]: CW, [L]: CCW)
- 2-pulse input method: CW → CW rotation signal input, CCW → CCW rotation signal input.

● C/D (auto current down)

- This function is to reduce the current provided for motor automatically for preventing severe motor's heat when motor stops.
- If motor RUN pulse is not applied, the current provided for motor reduces as the set STOP current.

※Be sure that when motor RUN current is reduced, the stop torque of motor also reduced.
※Set the STOP current by the STOP current setting switch.

◎ RUN current

Switch No.	0	1	2	3	4	5	6	7	8	9	A	B	C	D	E	F
Current (A/Phase)	0.4	0.5	0.57	0.63	0.71	0.77	0.84	0.9	0.96	1.02	1.09	1.15	1.22	1.27	1.33	1.4

- RUN current setting is for the current provided for motor when the motor runs.

※When RUN current is increased, RUN torque of the motor is also increased.
※When RUN current is set too high, the heat is severe.
※Set RUN current within the range of motor's rated current according to its load.
※Change RUN current only when the motor stops.

◎ STOP current

Switch No.	0	1	2	3	4	5	6	7	8	9	A	B	C	D	E	F
%	27	31	36	40	45	50	54	58	62	66	70	74	78	82	86	90

- STOP current setting is for the current provided for motor when the motor stops.
- This setting is applied when using C/D (current down) function.
- Setting value of STOP current is percentage (%) ratio of the set RUN current.

E.g.) Set RUN current as 1.4A and STOP current as 40%.
STOP current is set as 1.4A×0.4=0.56A

※When STOP current is decreased, STOP torque of the motor is also decreased.
※When STOP current is set too low, the heat is lower.
※Change STOP current only when the motor stops.

◎ Zero point excitation output signal (ZERO OUT) [Option]

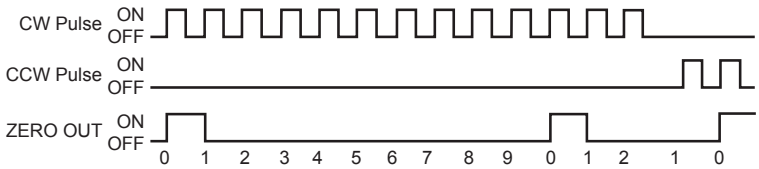

- This output indicates the initial step of excitation order of stepper motor and rotation position of motor axis.
- This signal outputs every 7.2° of rotation of the motor axis regardless of resolution.
  (50 outputs per 1 rotation of the motor.)
  E.g.) Full step: outputs one time by 10 pulses input,
  20-division: outputs one time by 200 pulses input.

◎ HOLD OFF function

- This signal is for rotating motor's axis using external force or used for manual positioning.
- When hold off signal maintains over 1ms as [H], motor excitation is released.
- When hold off signal maintains over 1ms as [L], motor excitation is in a normal status.

※Must stop the motor for using this function.
※Refer to ▣ I/O Circuit And Connections.

◎ Microstep (microstep: resolution)

Switch No.	0	1	2	3	4	5	6	7	8	9	A	B	C	D	E	F
Resolution	1	2	4	5	8	10	16	20	25	40	50	80	100	125	200	250
Step angle	0.72°	0.36°	0.18°	0.144°	0.09°	0.072°	0.045°	0.036°	0.0288°	0.018°	0.0144°	0.009°	0.0072°	0.00576°	0.0036°	0.00288°

- **Resolution (MS1)**
- The set step angle is dividing basic step angle (0.72°) of 5-phase stepper motor by setting value.
- The calculation formula of divided step angle is as below.

$$\text{Set step angle} = \frac{\text{Basic step angle (0.72°)}}{\text{Resolution}}$$

- When using geared type motor, the angle is step angle divided by gear ratio.
  Step angle/gear ratio = Step angle applied gear
  E.g) 0.72°/10 (1:10) = 0.072°

※Must stop the motor before changing the resolution.

■ I/O Circuit And Connections

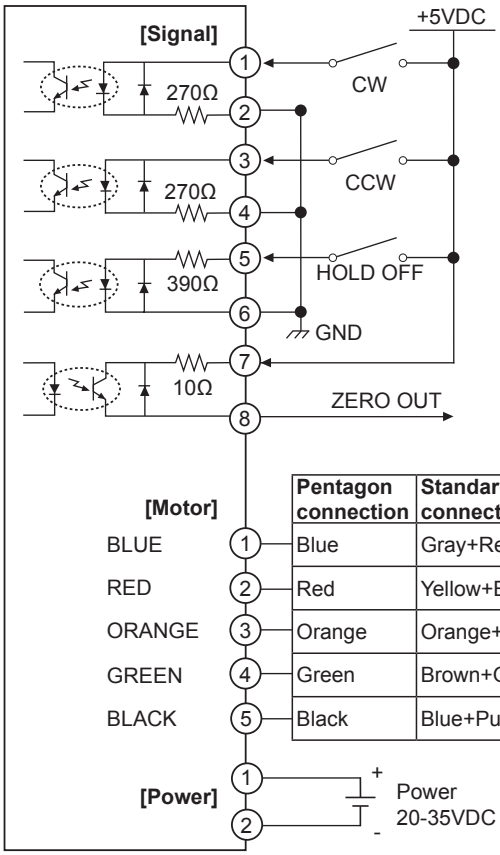

Pentagon connection	Standard connection
Blue	Gray+Red
Red	Yellow+Black
Orange	Orange+White
Green	Brown+Green
Black	Blue+Purple

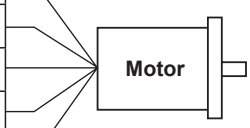

※CW
2-pulse input method (CW rotation signal input)
1-pulse input method (operating rotation signal input)

※CCW
2-pulse input method (CCW rotation signal input)
1-pulse input method (rotation direction signal input)
→ [H]: CW, [L]: CCW

※HOLD OFF
Control signal for motor excitation OFF
→ [H]: Motor excitation OFF

※ZERO OUT (option)
Zero point excitation output signal → Zero point status ON

※If the power for driving pulse from external is over than +5VDC, please connect resistor at the outside. (input voltage max. 24VDC, input current 10-20mA)

※In case of standard connection, refer to Q-40 page.

※This connection cable color is only for Autonics motors. It may different cable color when using other motors.

※Power input of 2/3-axis are used as same and I/O terminals are proportional to the number of axes.

■ Time Chart

◎ 1-pulse input method

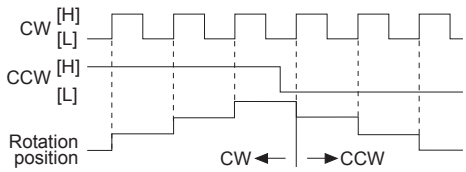

◎ 2-pulse input method

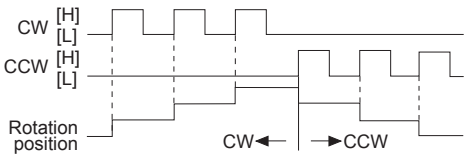

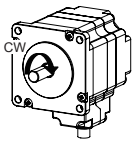

※Do not input CW, CCW signals at the same time in 2-pulse input method.
It may not operate properly if another direction signal is inputted when one of CW or CCW is [H].

▣ Dimensions

◎ MD5-HD14-2X

(unit: mm)

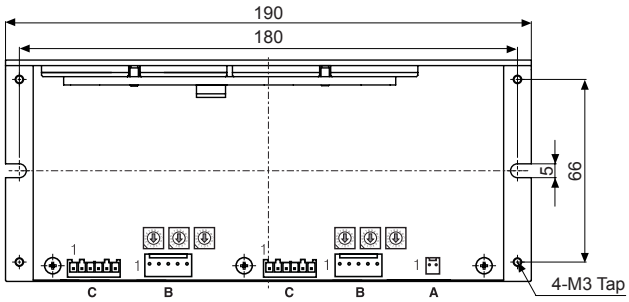

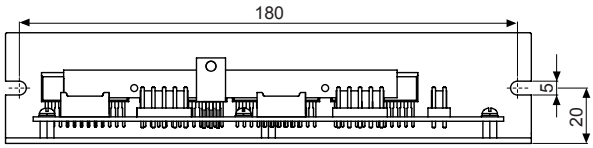

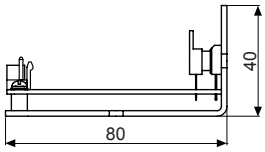

※Accessory connector specification

Accessory		Connector		Qty.
		Manufacturer	Model No.	
A	Power 2P housing	Yeonho electronics	YH396-02V	1
B	Motor 5P housing	Yeonho electronics	YH396-05V	2
C	Signal 6P housing	JST	XAP-06V-1	2
—	Power/Motor terminal pin	Yeonho electronics	YT396	12
—	Signal terminal pin	JST	SXA -001T-P0.6	12

◎ MD5-HD14-3X

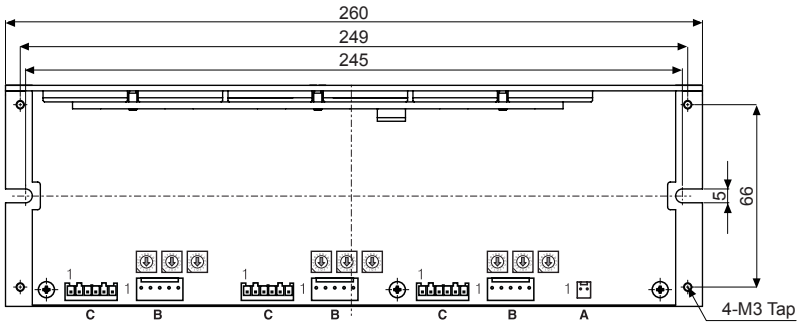

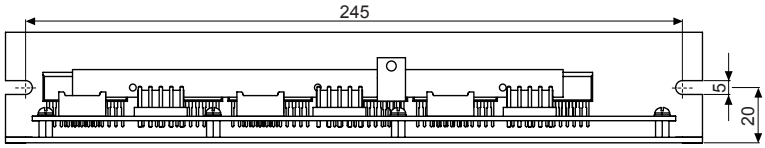

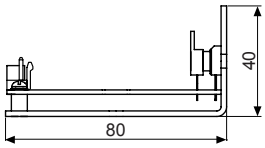

※Accessory connector specification

Accessory		Connector		Qty.
		Manufacturer	Model No.	
A	Power 2P housing	Yeonho electronics	YH396-02V	1
B	Motor 5P housing	Yeonho electronics	YH396-05V	3
C	Signal 6P housing	JST	XAP-06V-1	3
—	Power/Motor terminal pin	Yeonho electronics	YT396	17
—	Signal terminal pin	JST	SXA -001T-P0.6	18

■ Cautions During Use (common Specifications of 5-Phase Stepper Motor Driver)

1. For signal input

①Do not input CW, CCW signal at the same time in 2-pulse input method. Failure to follow this instruction may result in malfunction. It may not operate properly if another direction signal is inputted when one of CW or CCW is [H].
②When the signal input voltage is exceeded the rated voltage, connect additional resistance at the outside.

2. For RUN current, STOP current setting

①Set RUN current within the range of motor's rated current. Failure to follow this instruction may result in severe heat of motor or motor damage.
②If motor stops, switching for STOP current executed by the current down function. When hold off signal is [H] or current down function is OFF, the switching does not execute. (except MD5-ND14)
③Use the power for supplying sufficient current to the motor.
④Check the polarity of power before operating the unit. (only for MD5-HD14, HD14-2X/3X, ND14)

3. For rotating motor

(only for MD5-HD14, HD14-2X/3X, ND14)
①For rotating the motor when driver power turns OFF, separate the motor from the driver. (if not, the driver power turns ON)
②For rotating the motor when driver power turns ON, use Hold OFF function.

4. For cable connection

①Use twisted pair (over 0.2mm^2) for the signal cable which should be shorter than 2m.
②The thickness of cable should be same or thicker than the motor cable's when extending the motor cable.
③Must separate between the signal cable and the power cable over 10cm.

5. For installation

①The unit must be installed with heat protection. The conditions of ②, ③ should be satisfied. (※MD5-ND14)
②In order to increase heat protection efficiency of the driver, must install the heat sink close to metal panel and keep it well-ventilated.
③Excessive heat generation may occur on driver. Keep the heat sink under 80℃ when installing the unit. (at over 80℃, forcible cooling shall be required.)
④If the unit is installed in distribution panel, enclosed space or place with heat, it may cause product damage by heat. Install a ventilation. (only for MD5-HF28)
⑤For heat radiation of driver, install a fan as below figure. (distance between the ⓐ fan and the unit: approx. within 70mm, ⓑ min. airflow: 0.71m^3/min at least) (only for MD5-HF28)

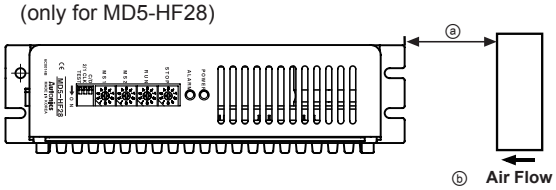

6. For using function selection DIP switches

①Be sure that the TEST switch is OFF before supplying the power. If the TEST switch is ON, the motor operates immediately and it may be dangerous. (except MD5-ND14)
②Do not change the pulse input method during the operation. It may cause danger as the revolution way of the motor is changed conversely.

7. This product may be used in the following environments.

① Indoor
② Altitude under 2,000m
③ Pollution degree 2
④ Installation category II